PUBLISHED: 19-JAN-2017
2017.0 DISCOVERY (LR), 307-01

AUTOMATIC TRANSMISSION/TRANSAXLE - VEHICLES WITH: 8HP45 8-SPEED AUTOMATIC TRANSMISSION AWD

EXTENSION HOUSING SEAL (G1980272)

REMOVAL AND INSTALLATION

44.20.21	OIL SEAL - OUTPUT SHAFT - RENEW	3000 CC, AJ V6 (AJ126), SINGLE SPEED TRANSFER CASE	4.6	USED WITHINS	
44.20.21	OIL SEAL - OUTPUT SHAFT - RENEW	3000 CC, AJ V6 (AJ126), TWIN SPEED TRANSFER CASE	4.5	USED WITHINS	

transmissionmanuals.com

PART(S)

STEP	PART NAME	QUANTITY
Installation Step 1	Extension housing seal	1

REMOVAL

NOTE:

Some variation in the illustrations may occur, but the essential information is always correct.

1. Remove transfer case.
   Refer to: Transfer Case - V6 S/C 3.0L Petrol (308-07 Transfer Case - Vehicles With: Twin Speed Transfer Case, Removal).
   Refer to: Transfer Case - V6 S/C 3.0L Petrol (308-07 Transfer Case - Vehicles With: Single Speed Transfer Case, Removal).

2. **CAUTION:**

   Care must be taken to avoid damage to the seal register and running surface.

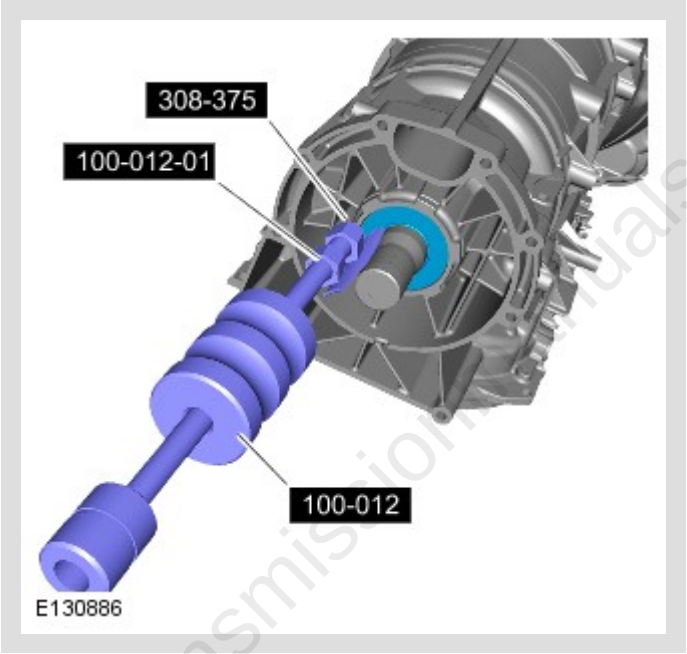

transmissionmanuals.com

INSTALLATION

1.

CAUTION:

Oil seals must be installed dry.

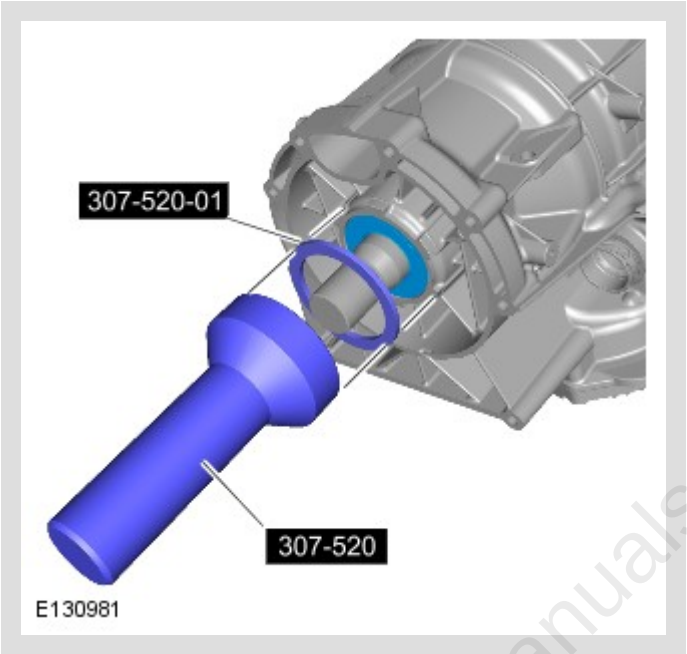

Renew Part: Extension housing seal Quantity: 1 .

2. Install transfer case.
Refer to: Transfer Case - V6 S/C 3.0L Petrol (308-07 Transfer Case - Vehicles With: Twin Speed Transfer Case, Installation).
Refer to: Transfer Case - V6 S/C 3.0L Petrol (308-07 Transfer Case - Vehicles With: Single Speed Transfer Case, Installation).

3. Carry out a transmission fluid level check.
Refer to: Transmission Fluid Level Check - V6 S/C 3.0L Petrol (307-01 Automatic Transmission/Transaxle - Vehicles With: 8HP45 8-Speed Automatic Transmission AWD, General Procedures).

transmissionmanuals.com